Red Sea REEFER™

XXL 750

Aquarium & Cabinet Assembly Manual

Red Sea

Aquarium Water Management System

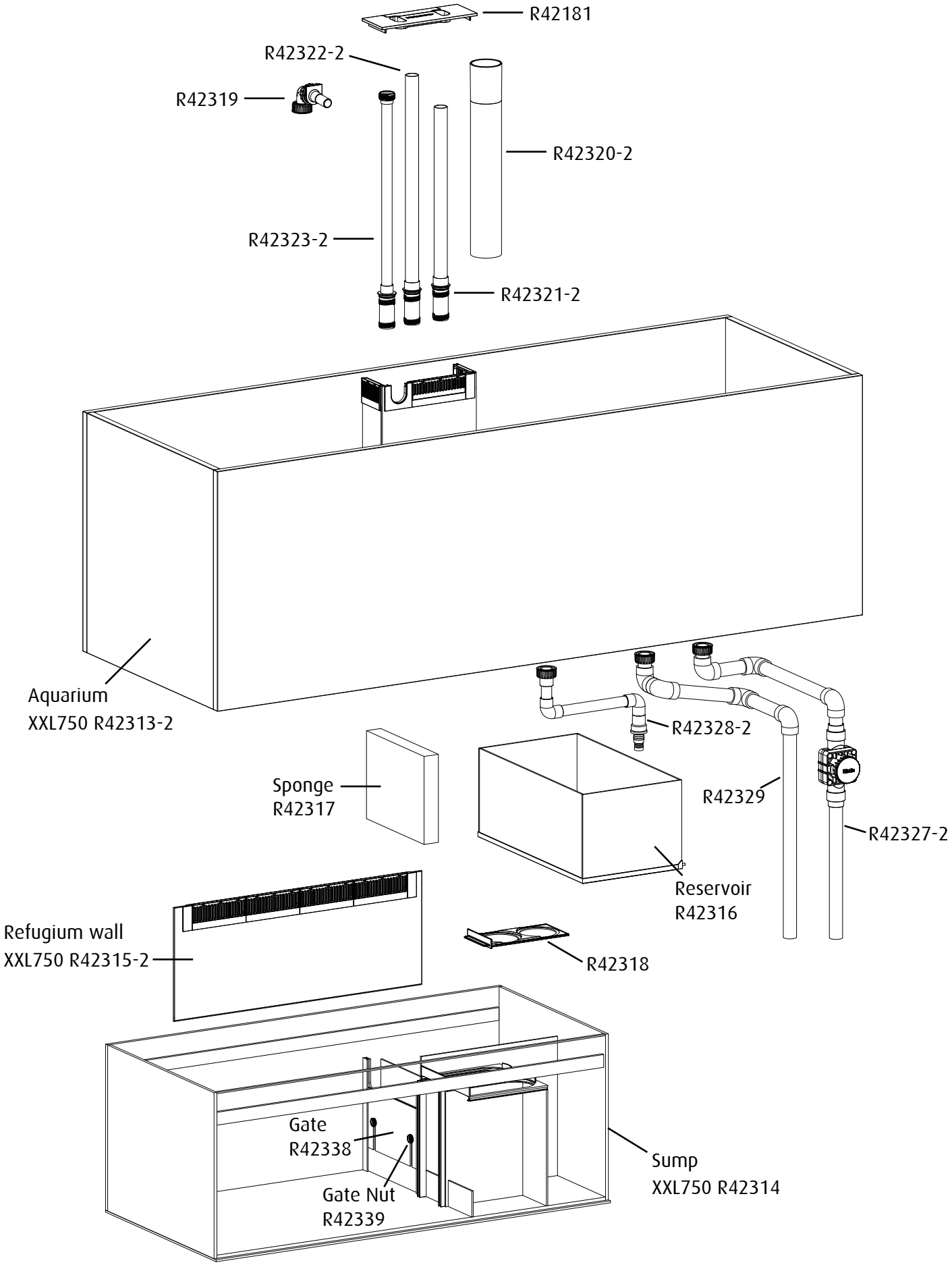

Cabinet

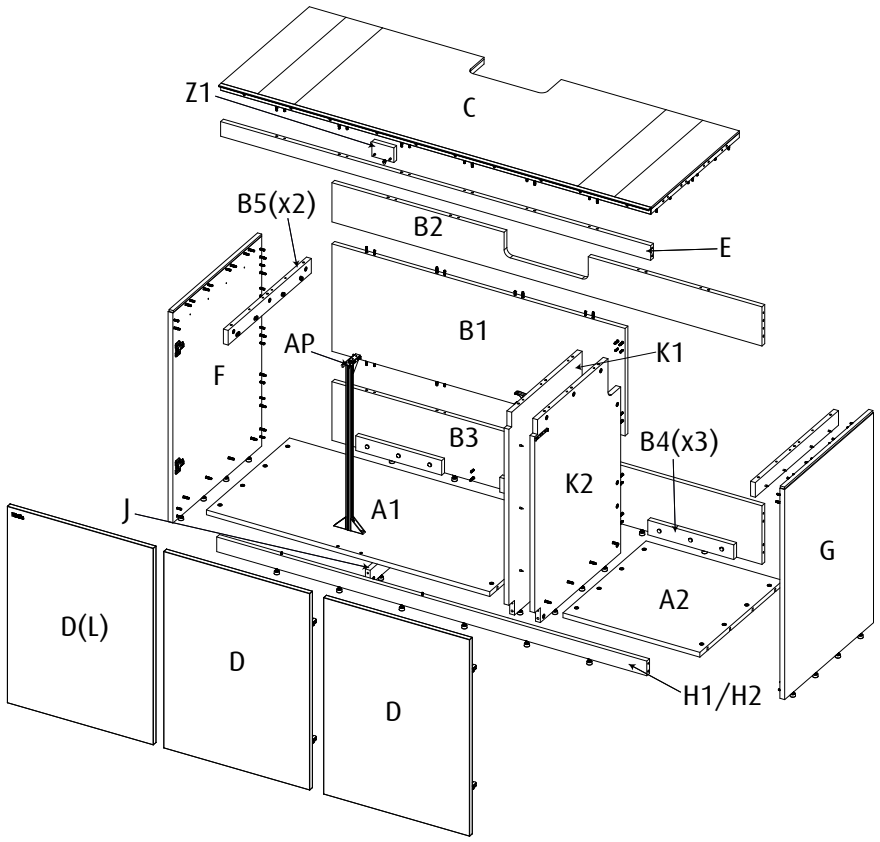

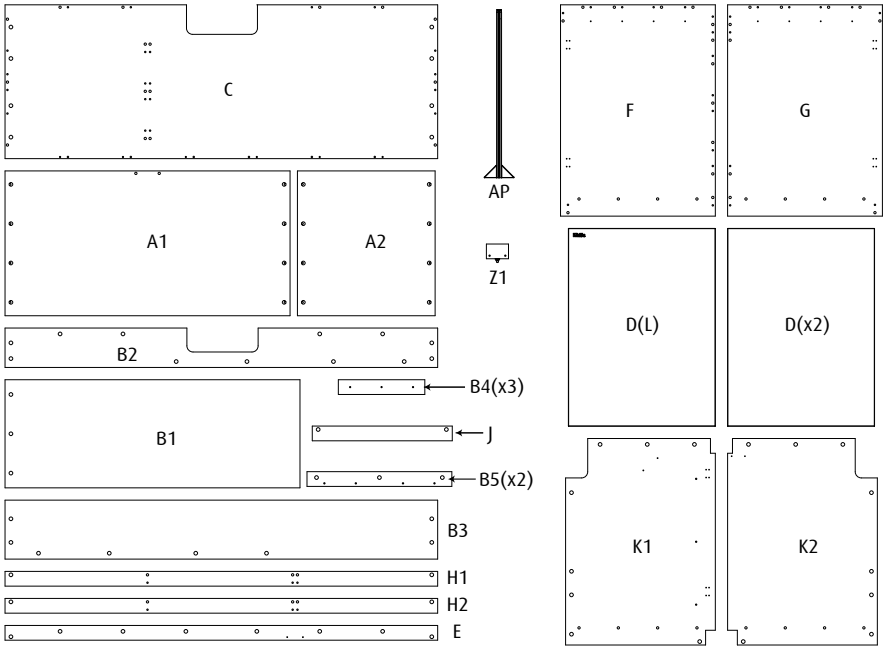

L2 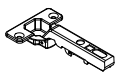 L1	6
N	72
M 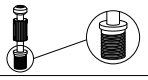	75
M2 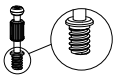	6
P	81
Q	81
R	1
S	3
T1	1
T2	3
V1 ST4x16	36
V2 ST3.5x14	2
V3 ST5x35	22
V5 M5x10	1
V6 ST5x60	2
V8 M6x10	2
W	22
Y40	2
Z	29
Z1	1

XXL 750	Black	White	Part Description
A1	7438B	7438B	Cabinet Bottom Sump
A2	7439B	7439B	Cabinet Bottom Chiller
AP	R42495	R42495	Cabinet front support
B1	7434B	7434B	Cabinet Rear Middle
B2	7435B-2	7435B-2	Cabinet Rear Top
B3	7436B	7436B	Cabinet Rear Bottom
B4	6240B	6240B	Cabinet Rear Bottom Support x3
B5	7429-1B	7429-1B	Cabinet Side Top support
C	7437B-2	7437B-2	Cabinet Top
DL/D	5275B	5275W	Cabinet Door x3 (Come in color pack)

XXL 750	Black	White	Part Description
E	7432B	7432B	Cabinet Front Upper
F	7443B	7443WB	Cabinet Side Left (Come in color pack)
G	7444B	7444WB	Cabinet Side Right (Come in color pack)
H1	7433B	7433B	Cabinet Sockel
H2	7433W	7433W	Cabinet Sockel
J	6135-1B	6135-1B	Cabinet Base support
K1	7440LB-2	7440LB-2	Cabinet Internal Wall Left
K2	7440RB	7440RB	Cabinet Internal Wall Right
Z1	7582B	7582B	Top support plate

1

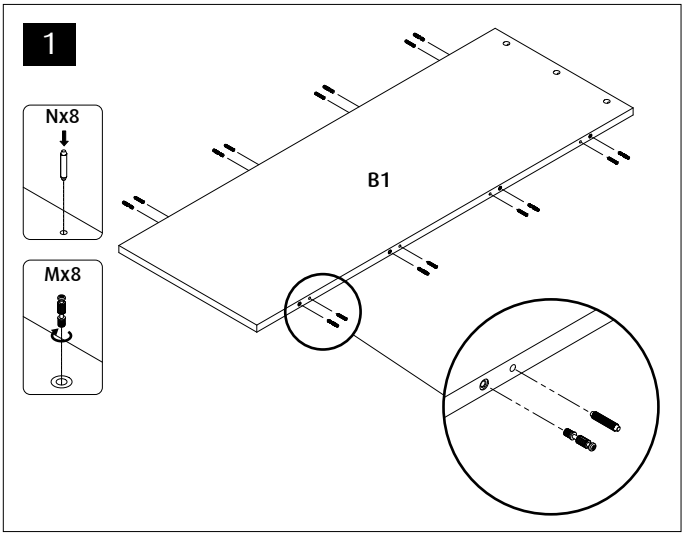
Nx8
Mx8
B1

2

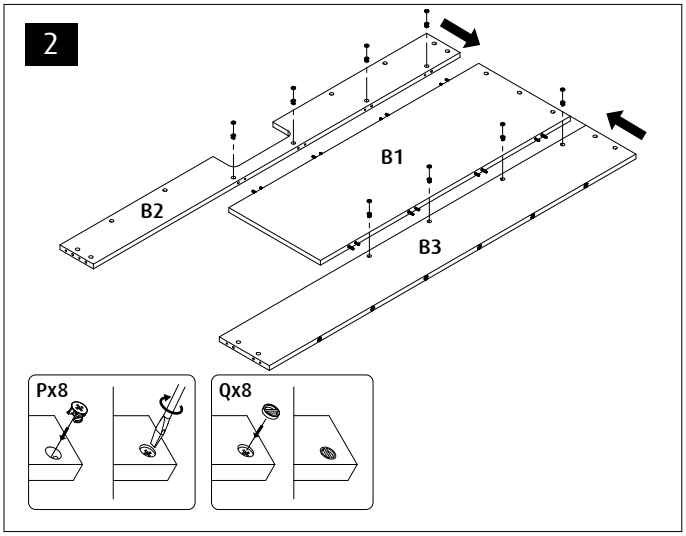
B1
B2
B3
Px8
Qx8

3

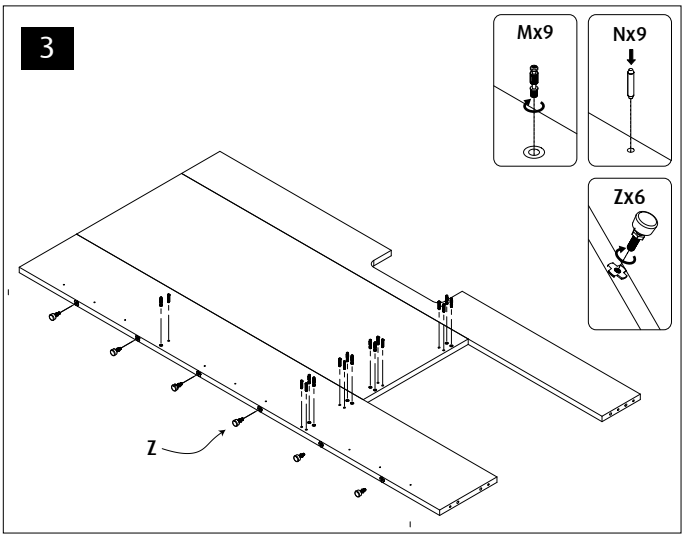
Mx9
Nx9
Zx6
Z

4

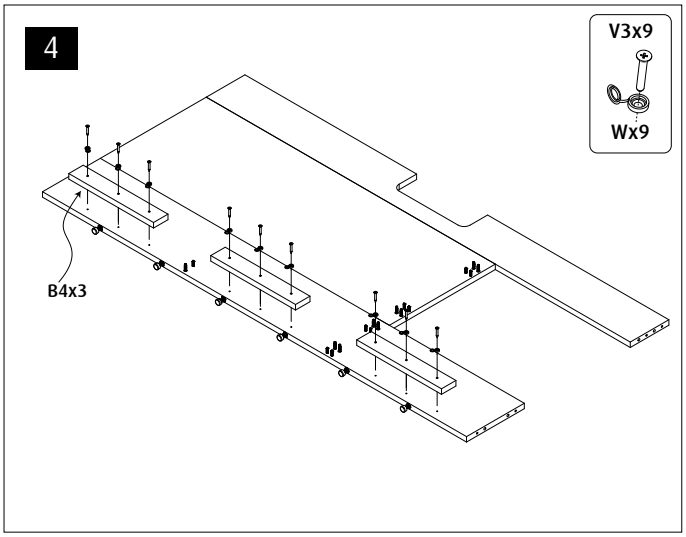
V3x9
Wx9
B4x3

5

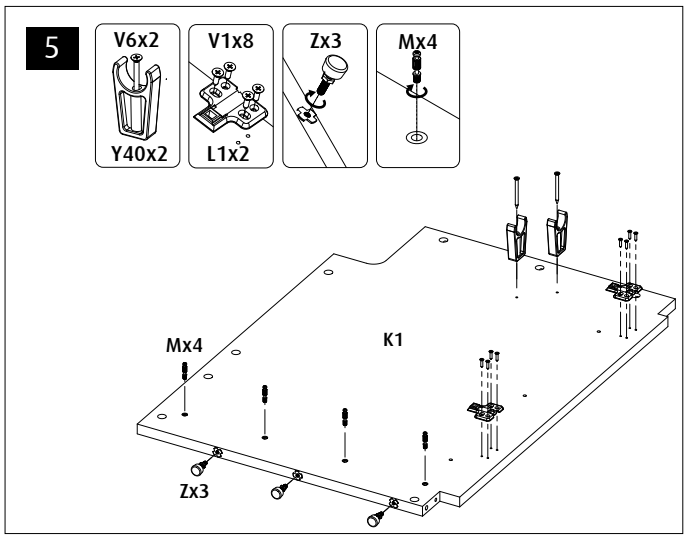
V6x2
Y40x2
V1x8
L1x2
Zx3
Mx4
Mx4
K1
Zx3

6

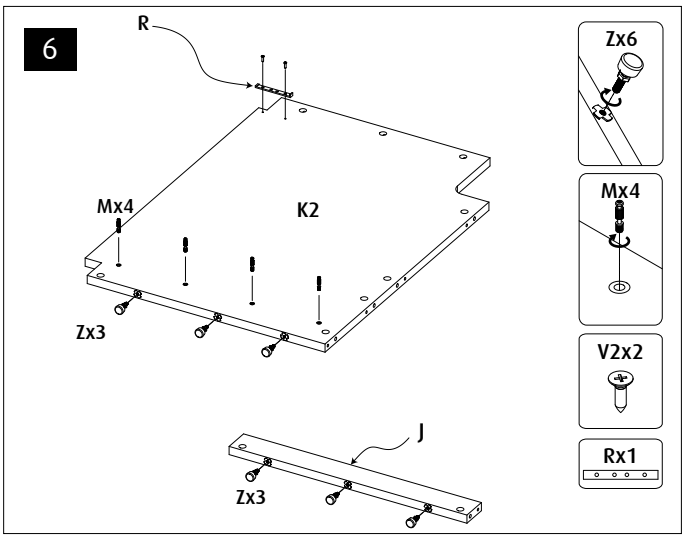
R
Zx6
Mx4
K2
Mx4
Zx3
V2x2
Rx1
J
Zx3

7

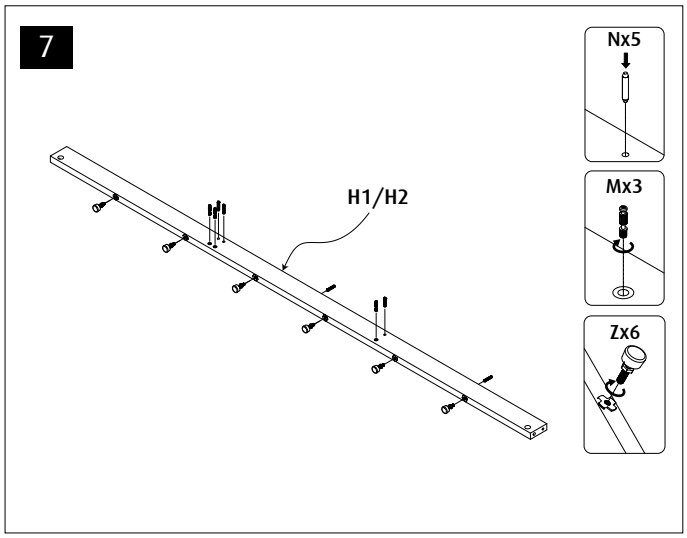
Nx5
Mx3
Zx6
H1/H2

8

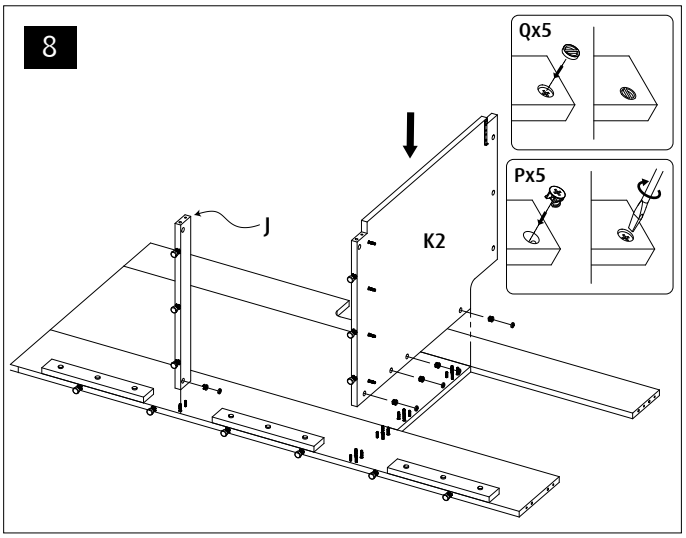
Qx5
Px5
J
K2

9

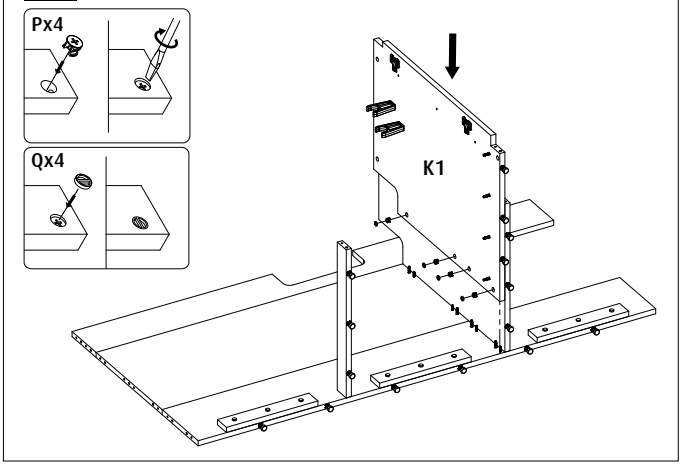

10

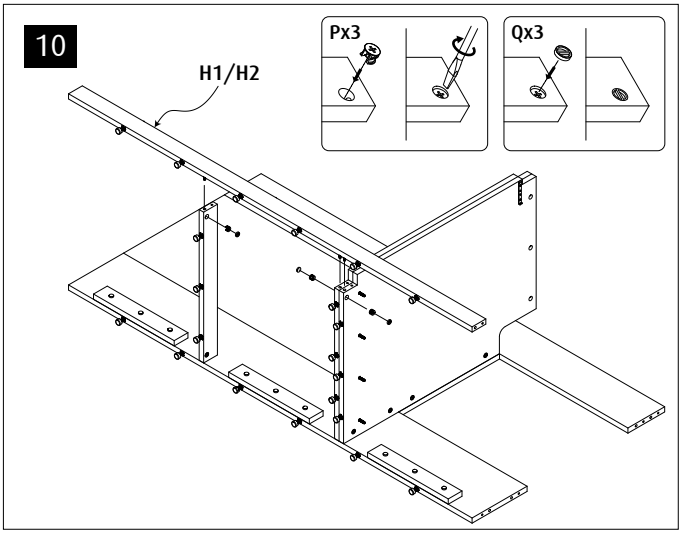

11

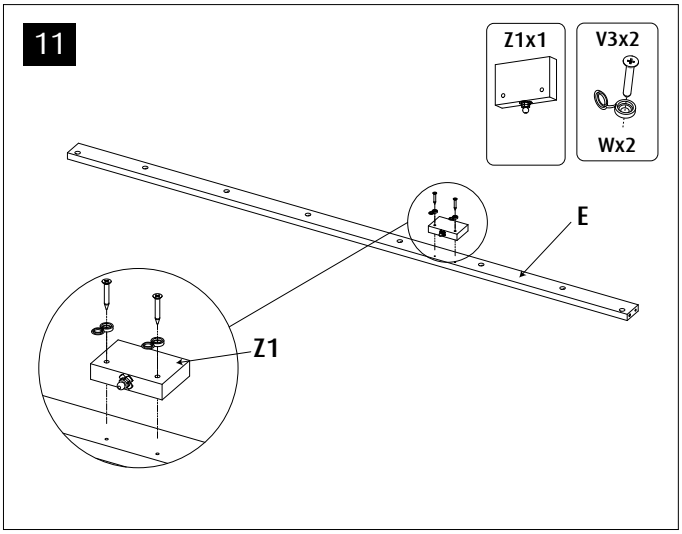

12

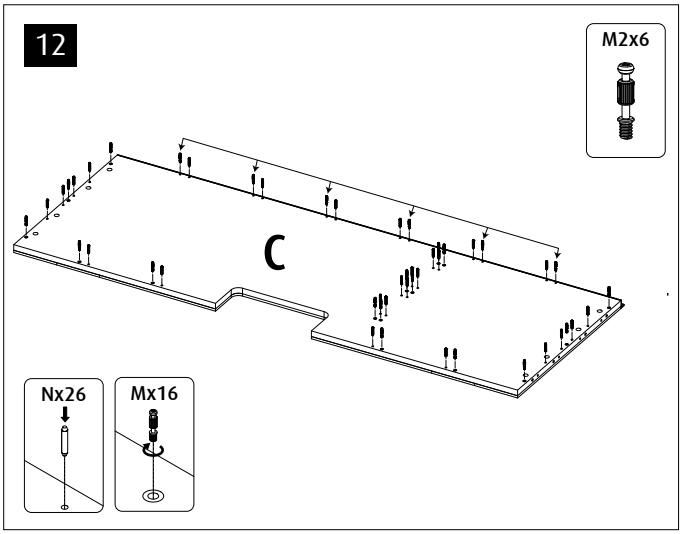

13

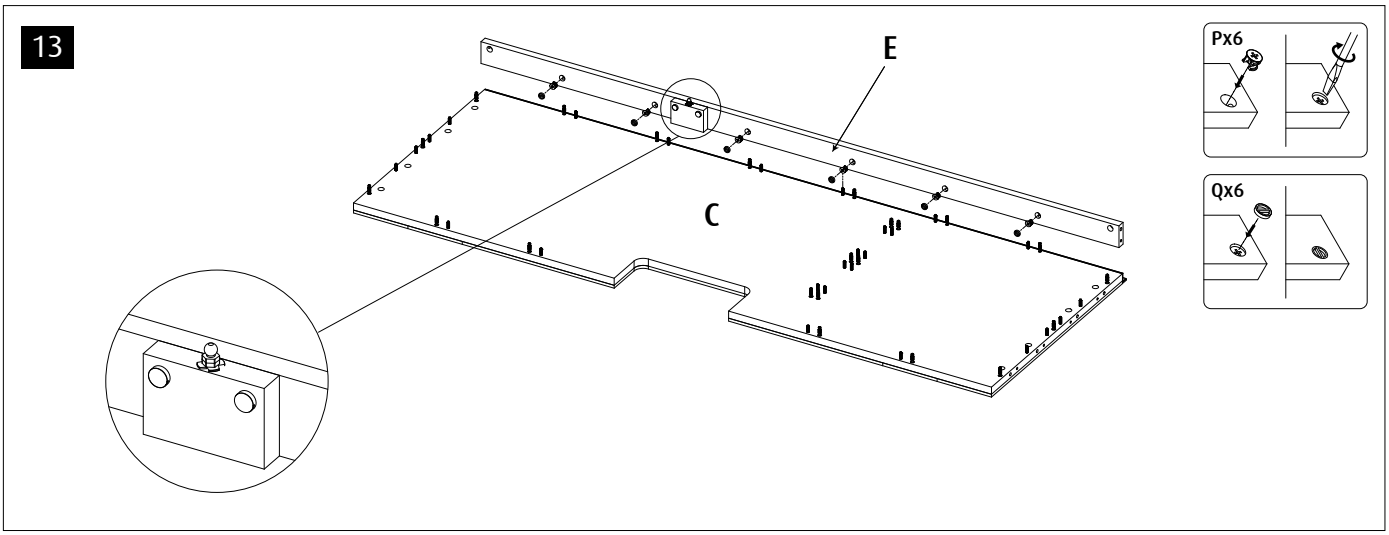

14

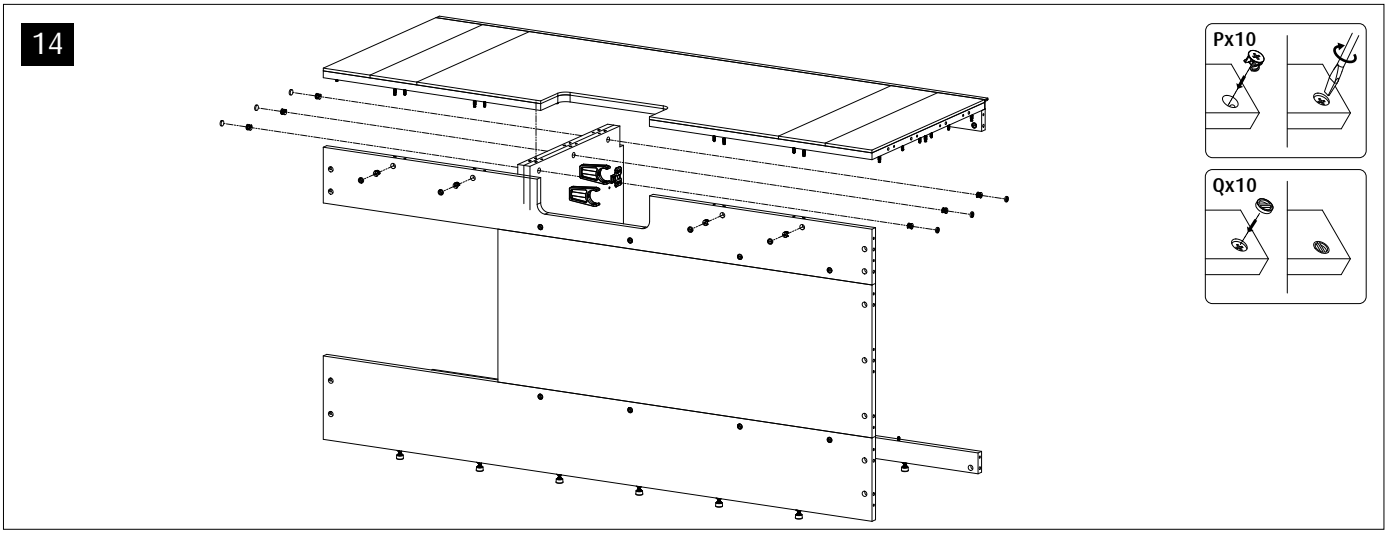

15

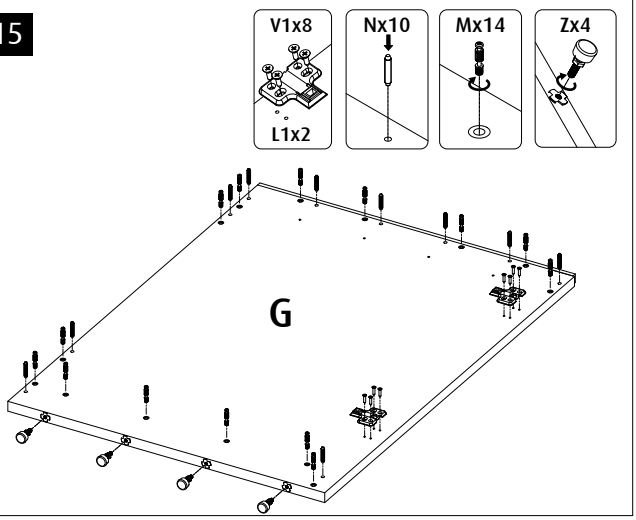

16

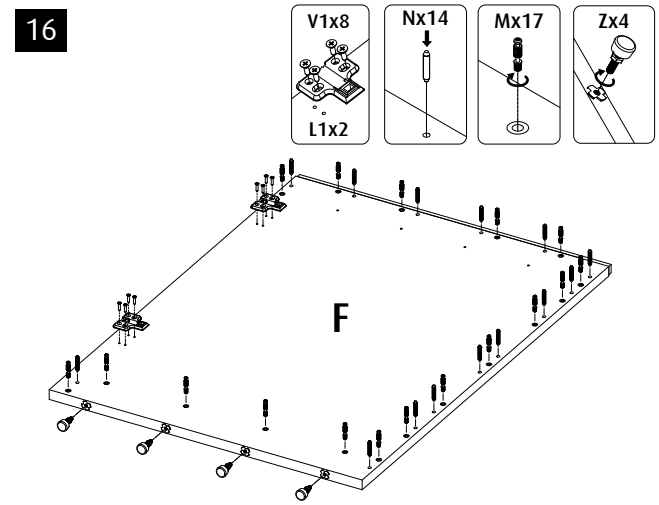

17

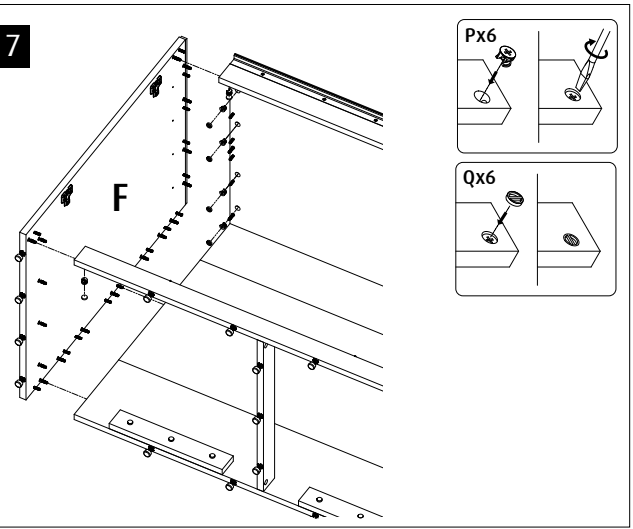

18

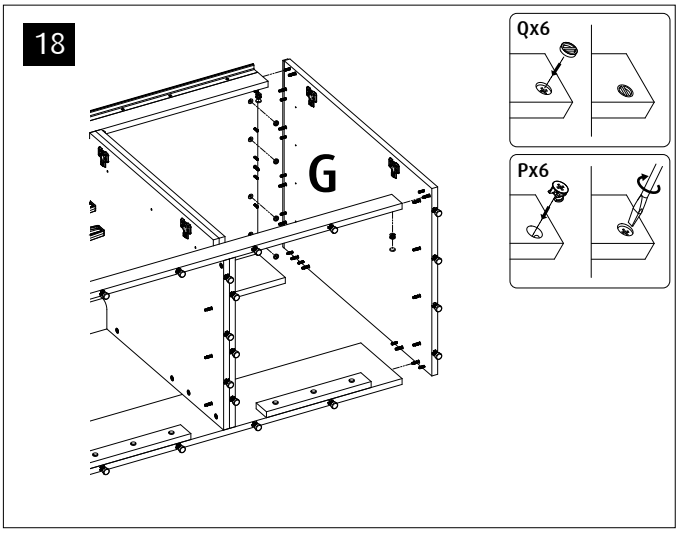

19

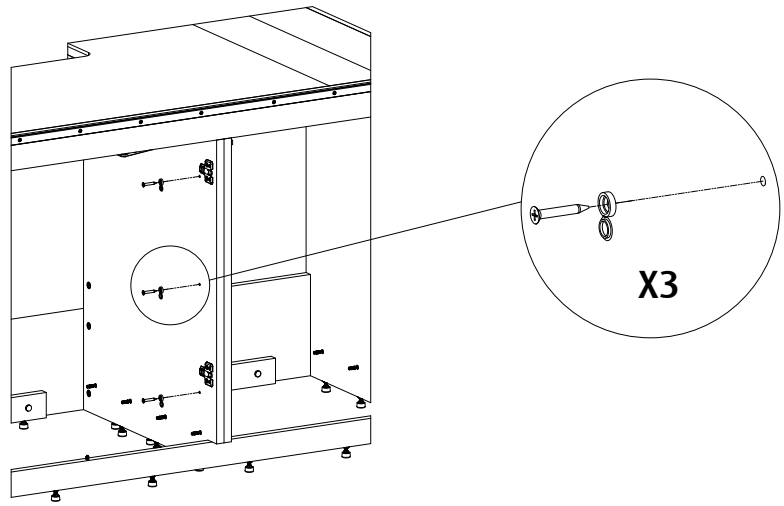

20

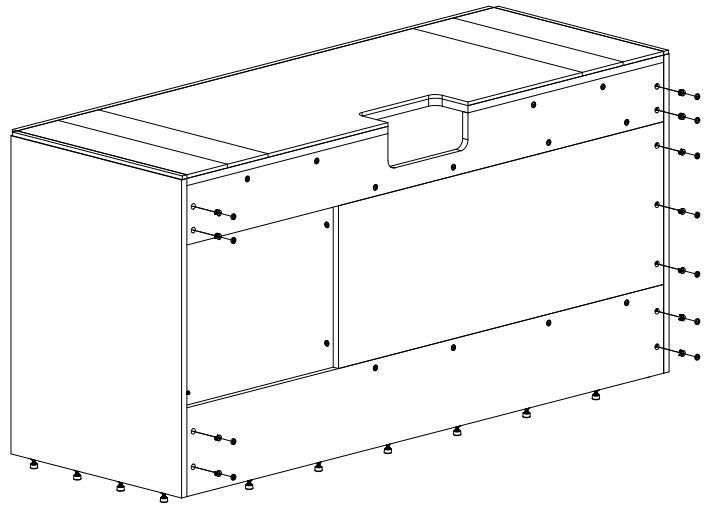

21

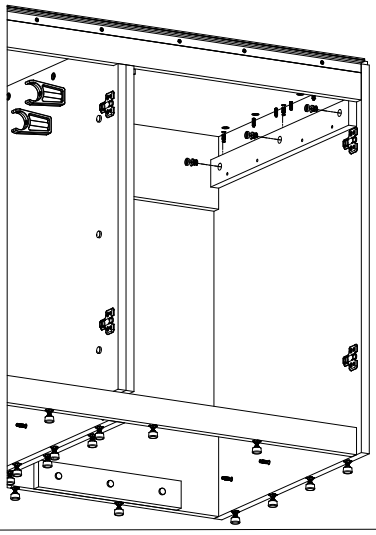

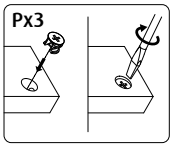

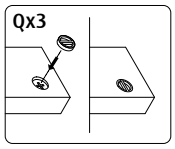

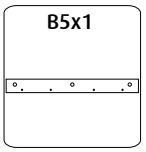

22

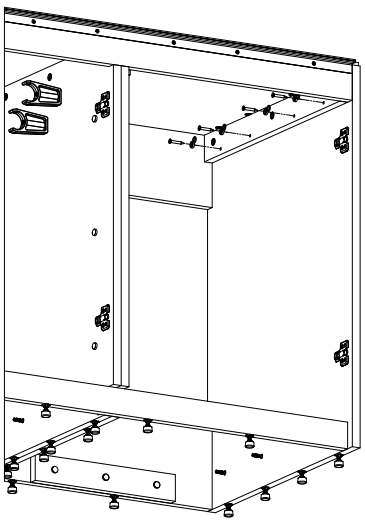

23

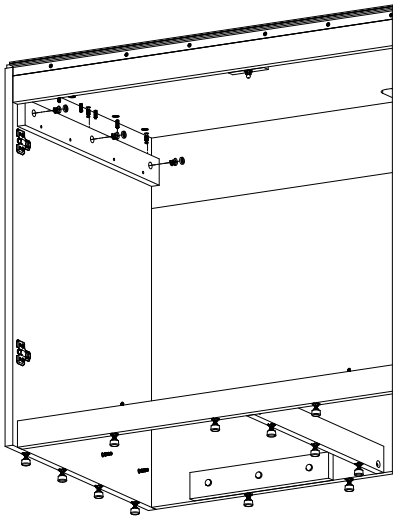

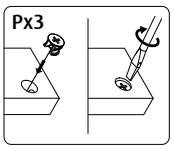

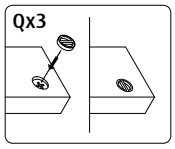

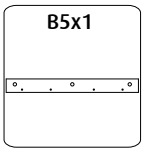

24

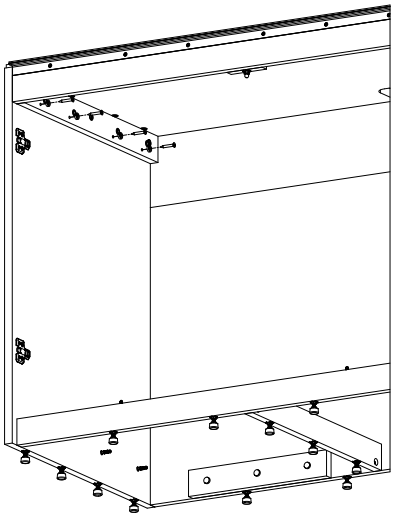

25

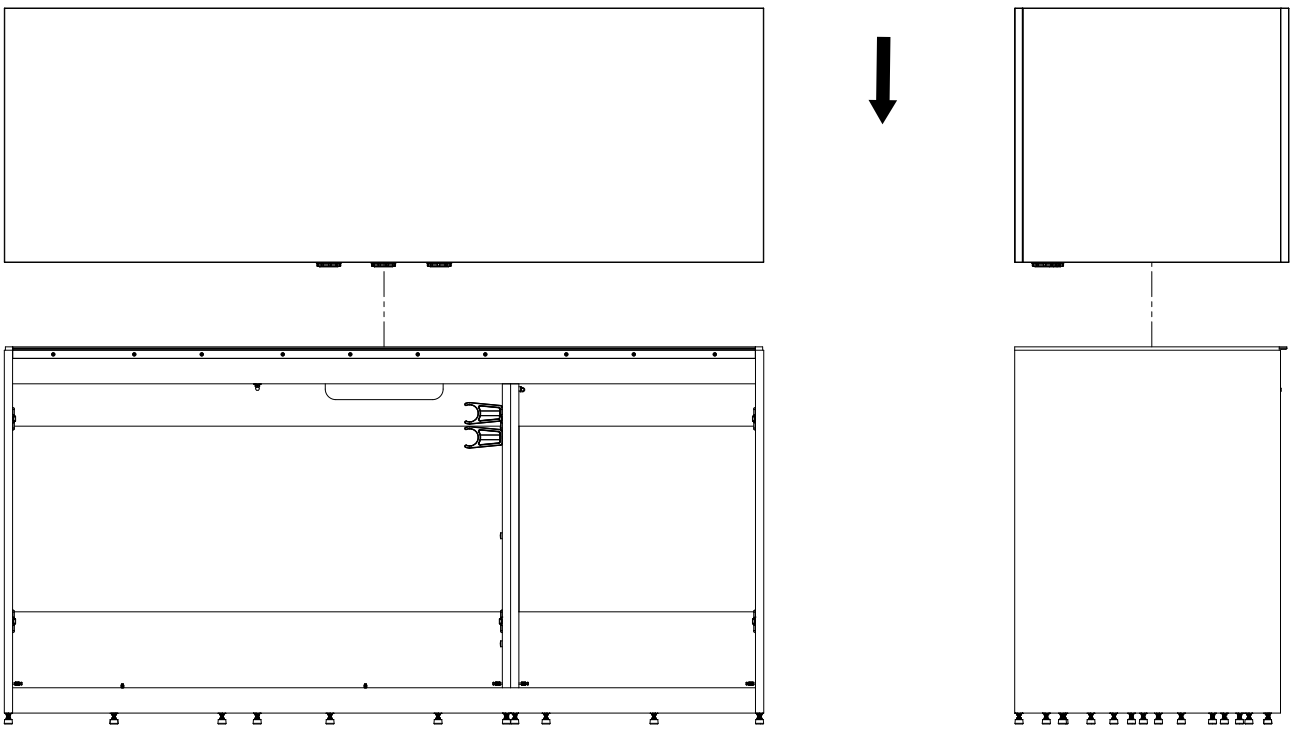

26

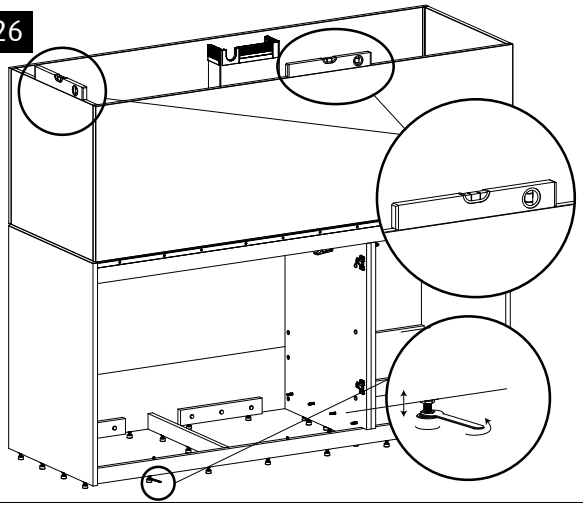

27

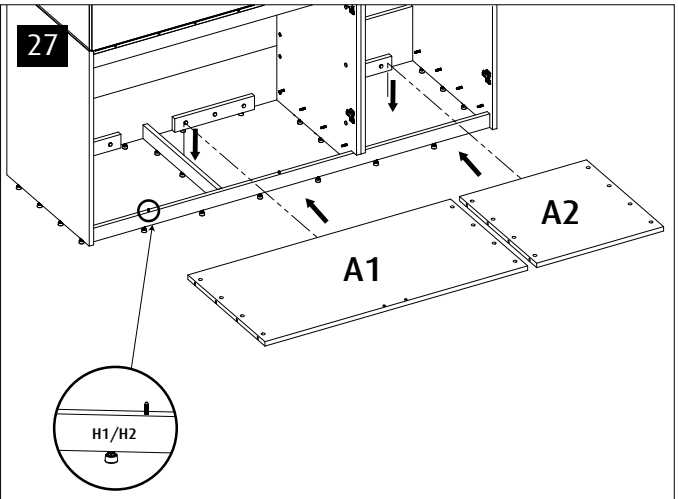

28

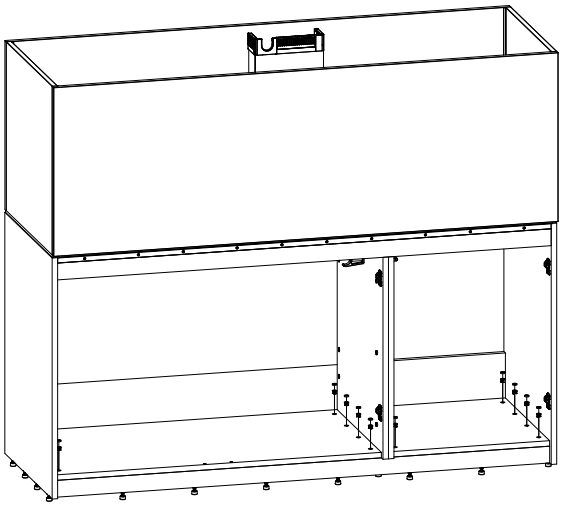

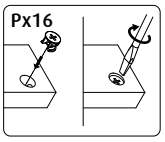

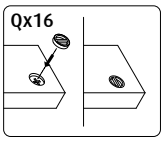

29

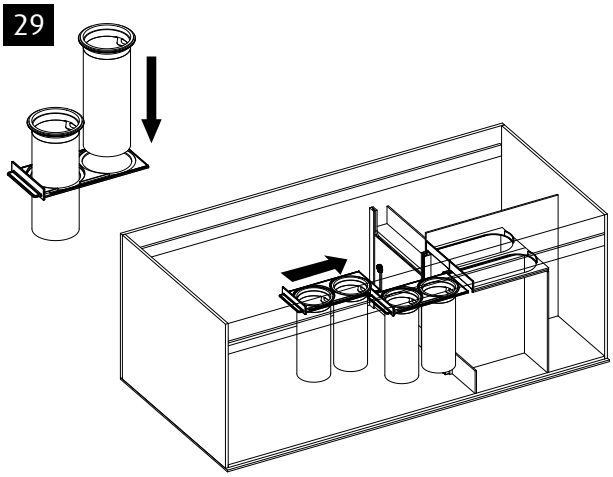

30

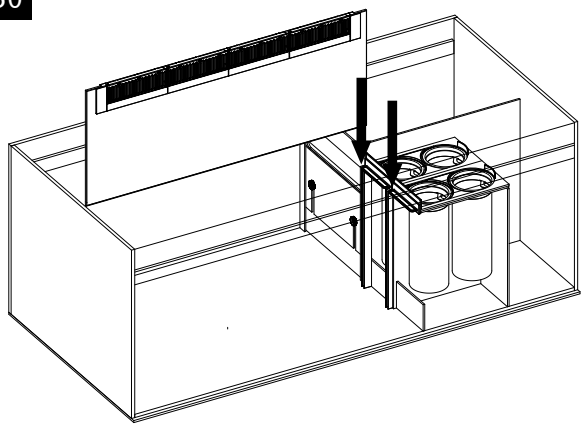

31

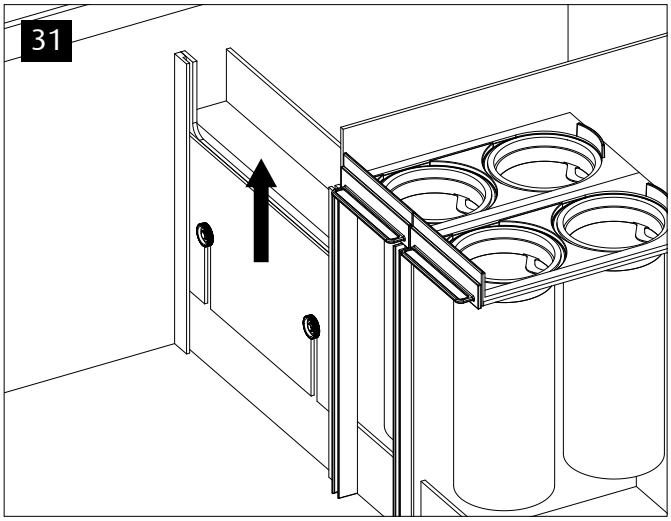

32

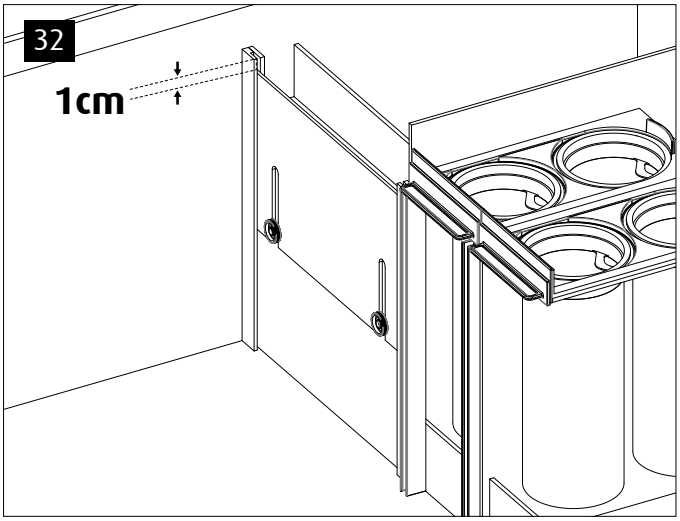

33

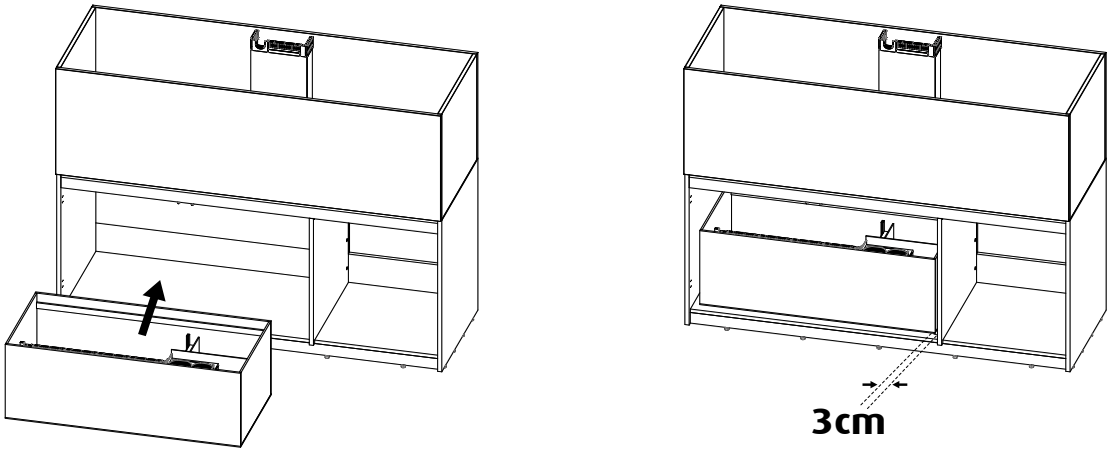

34

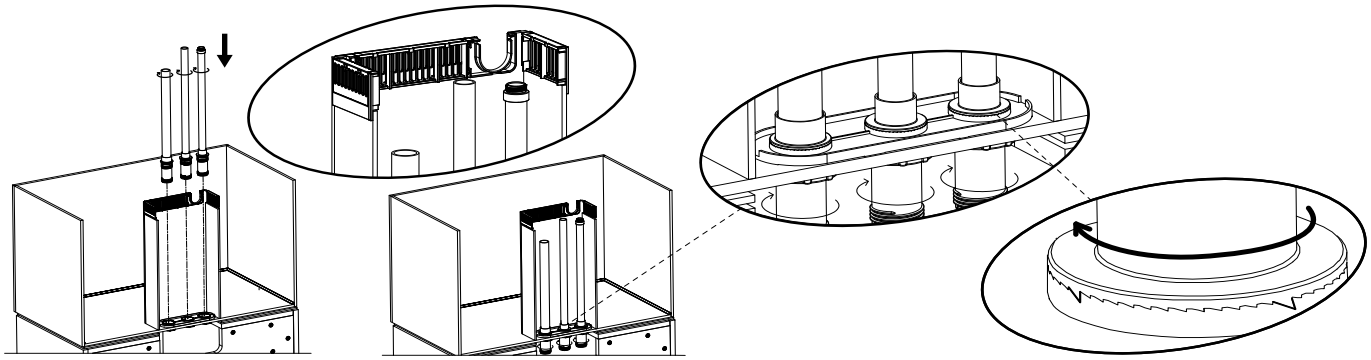

35

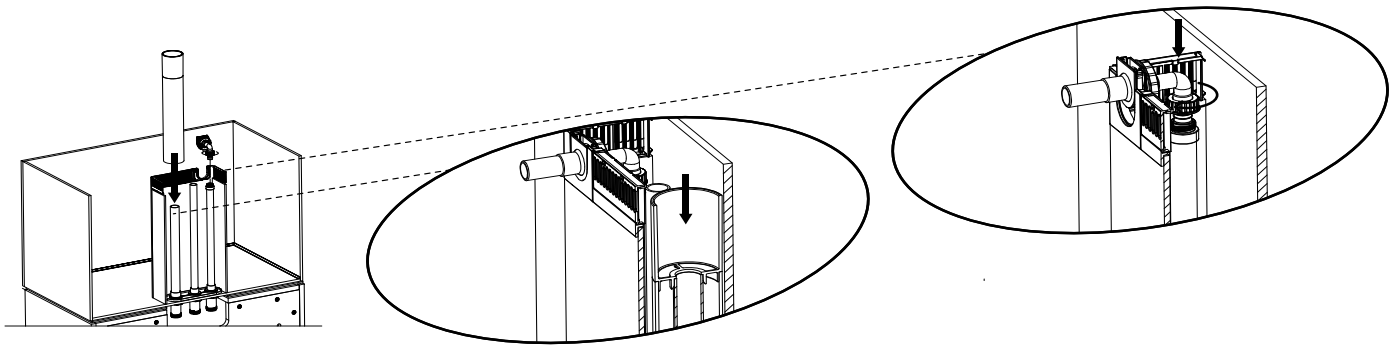

36

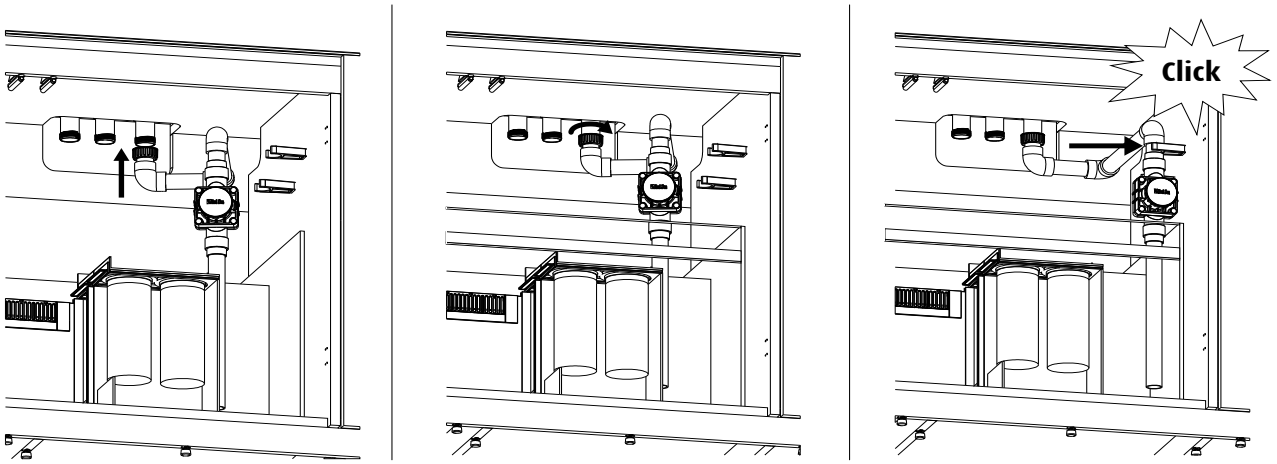

37

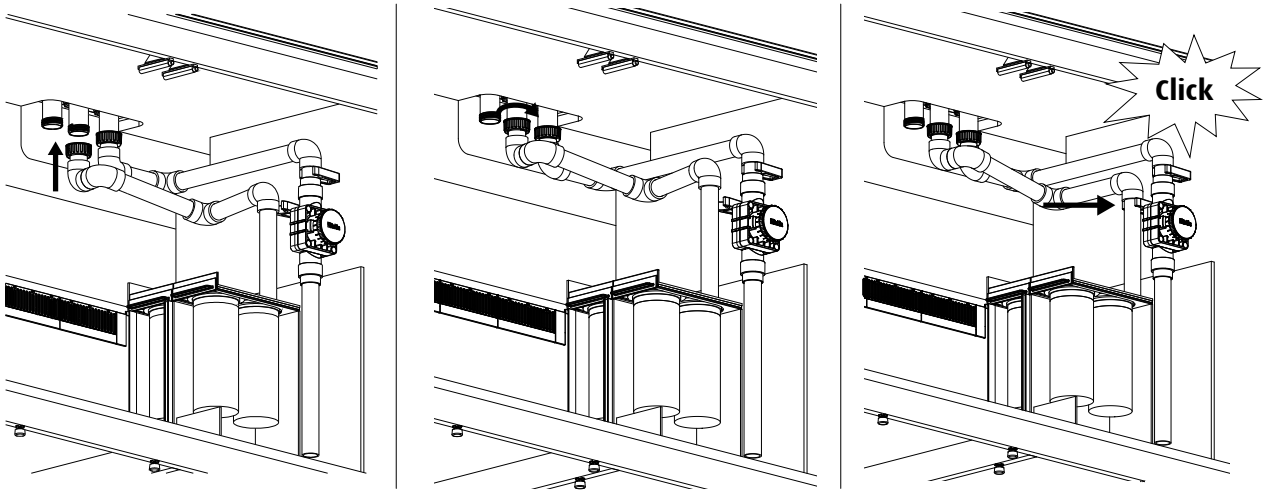

38

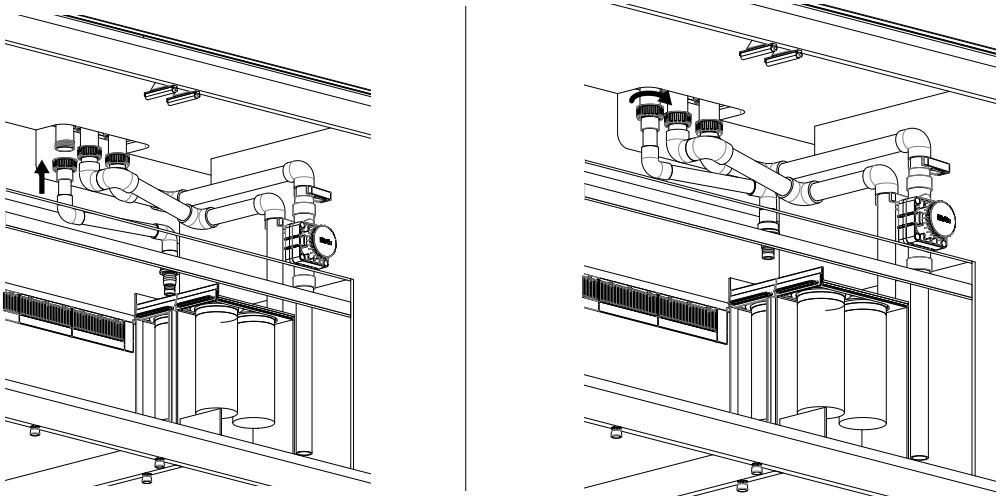

39

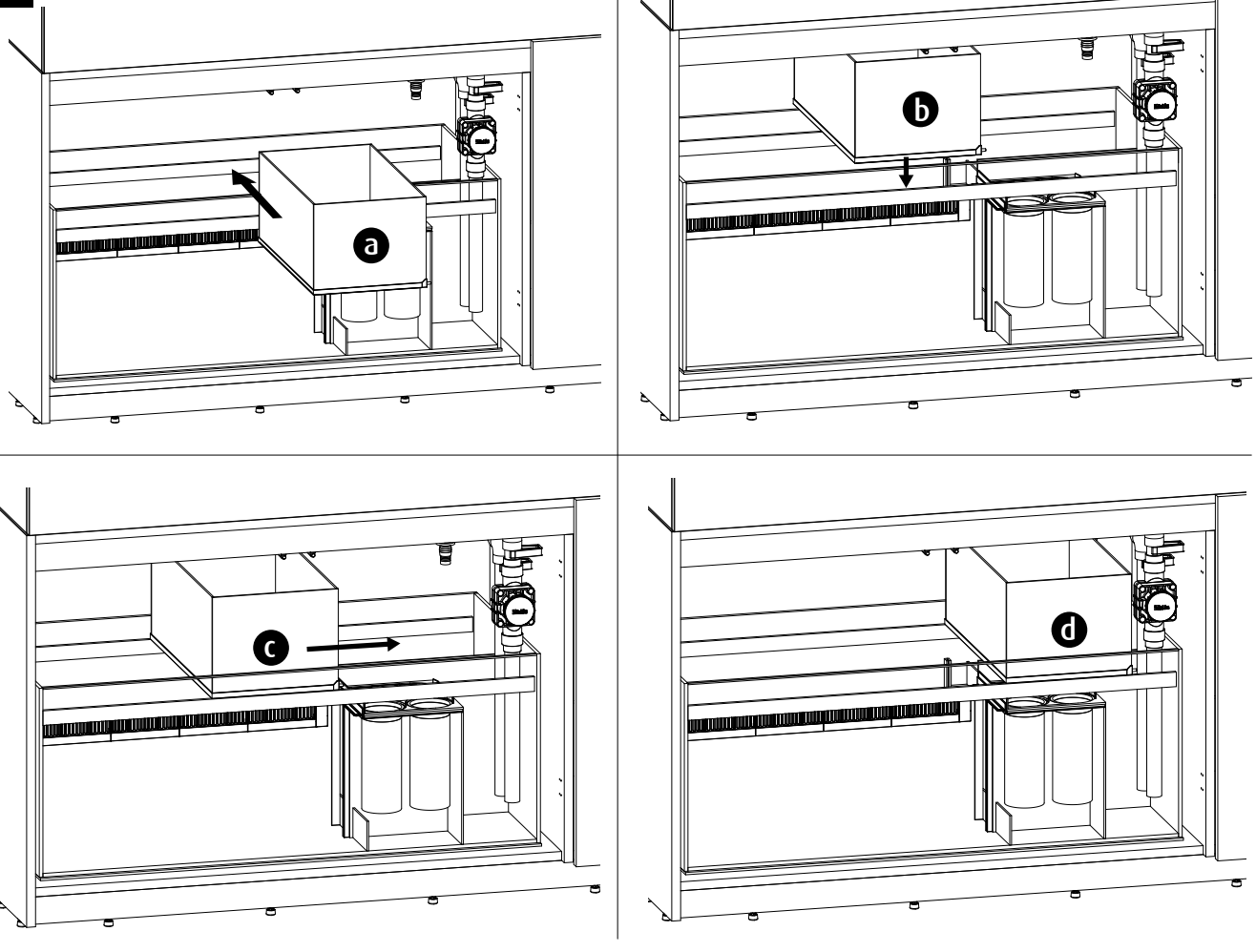

40

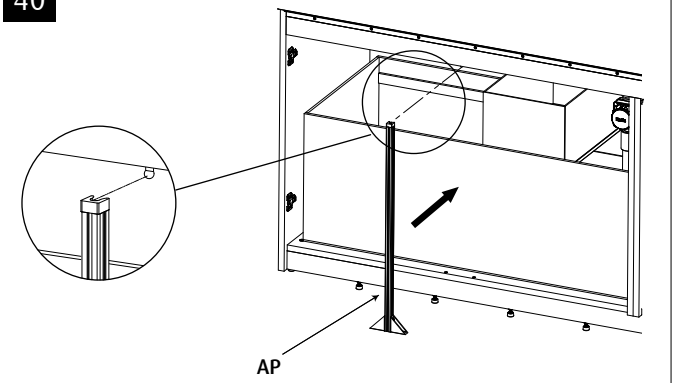

41

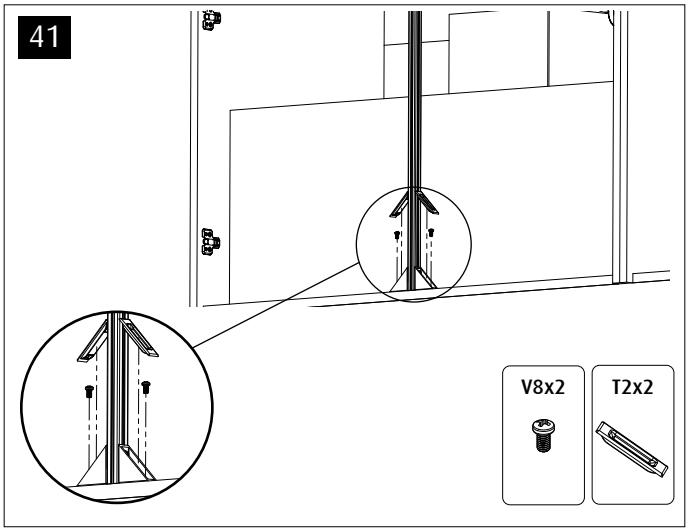

42

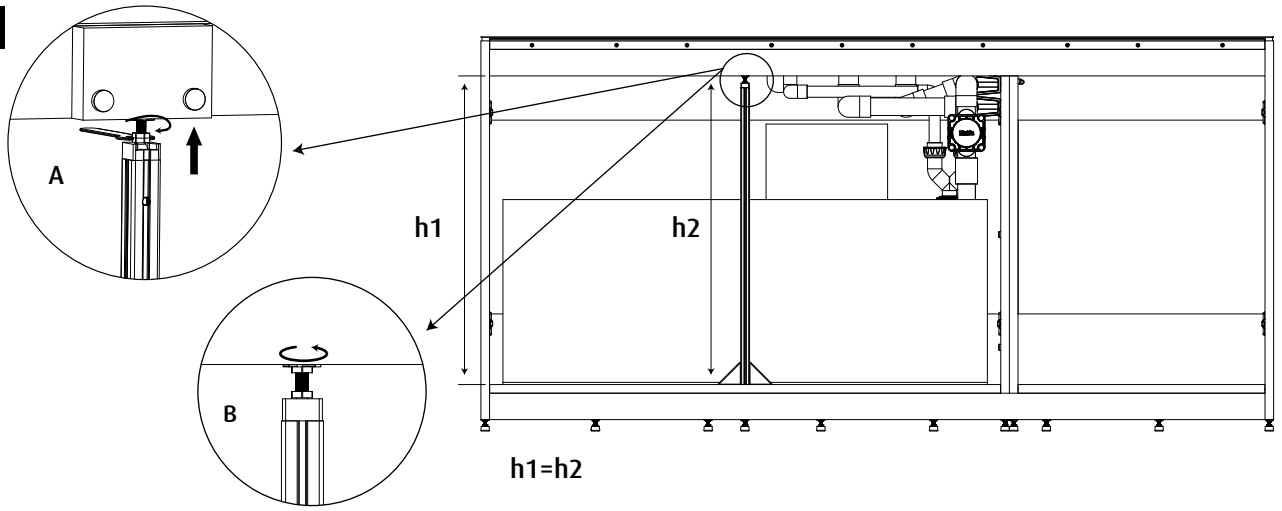

43

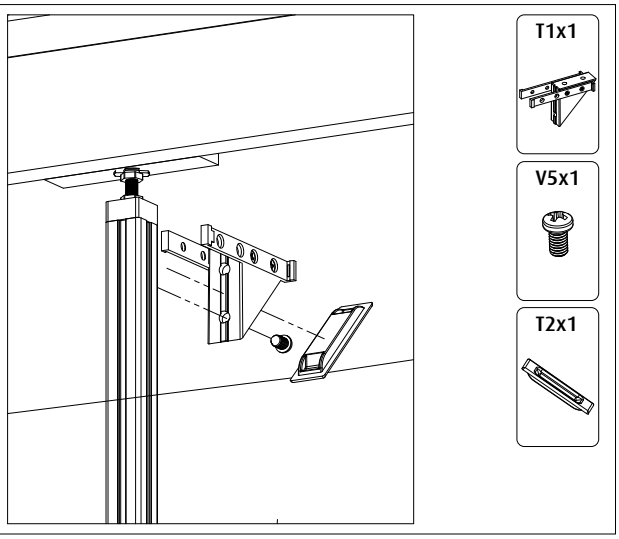

44

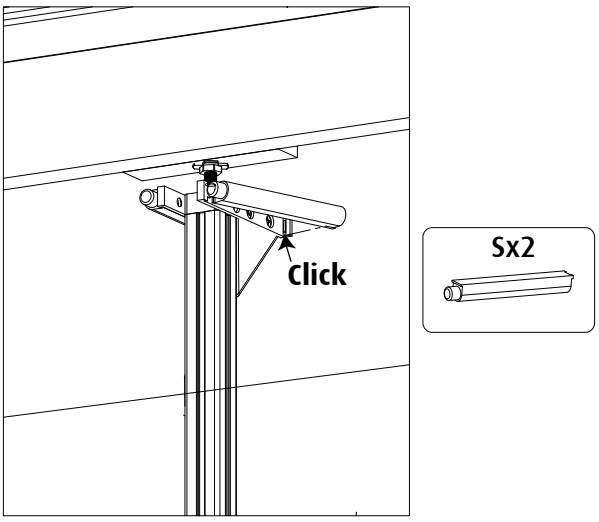

45

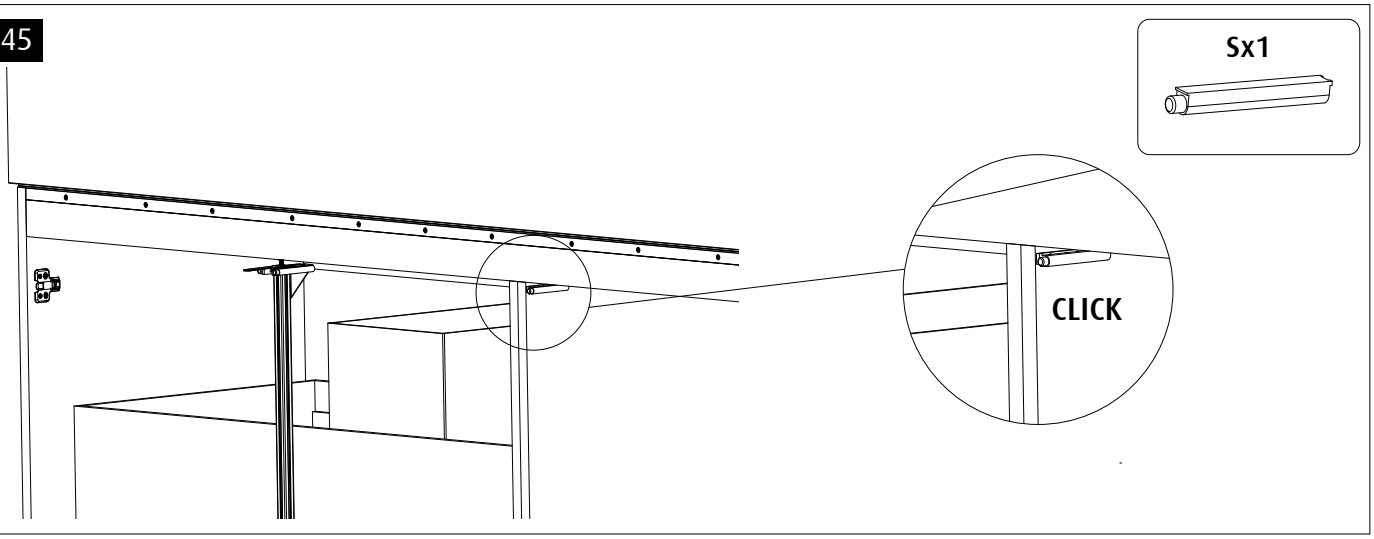

46

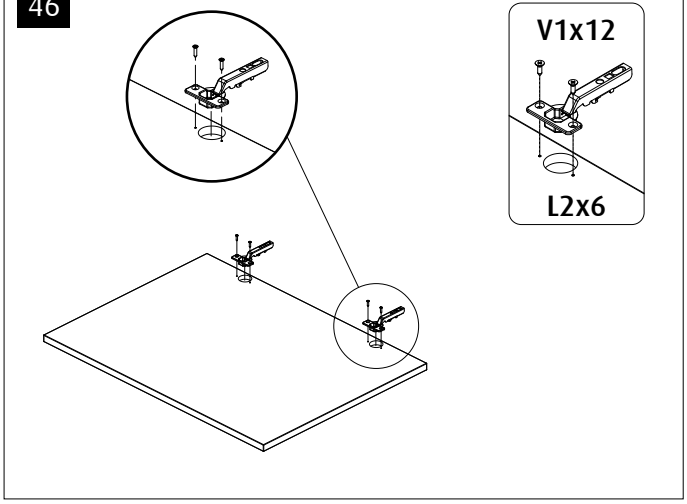

47

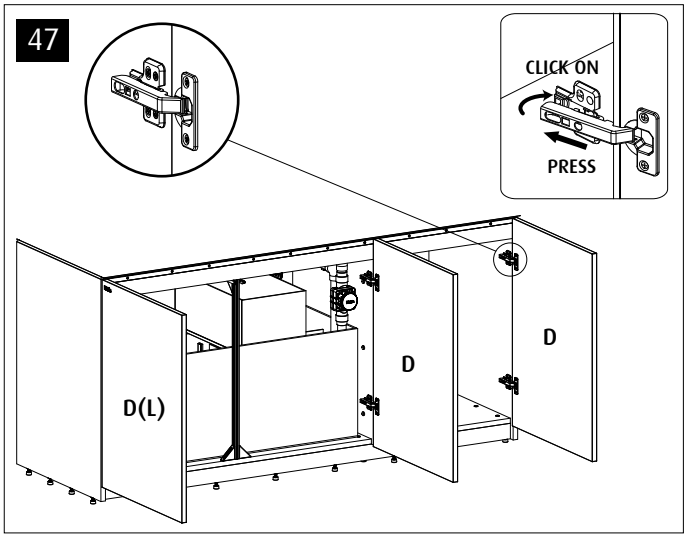

48

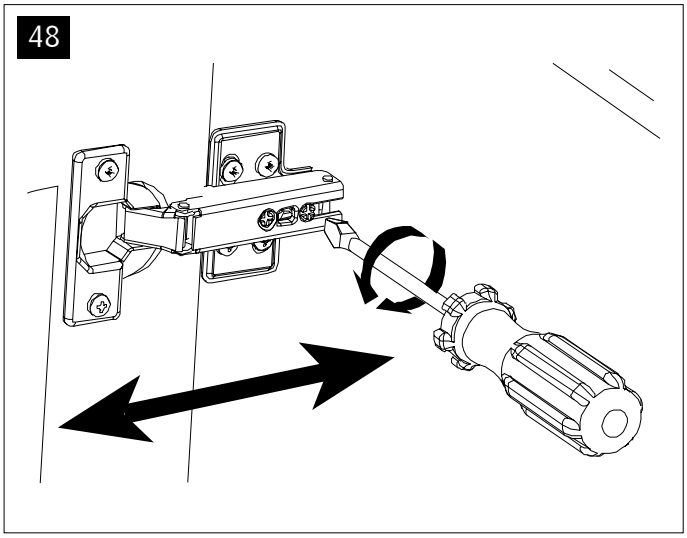

49

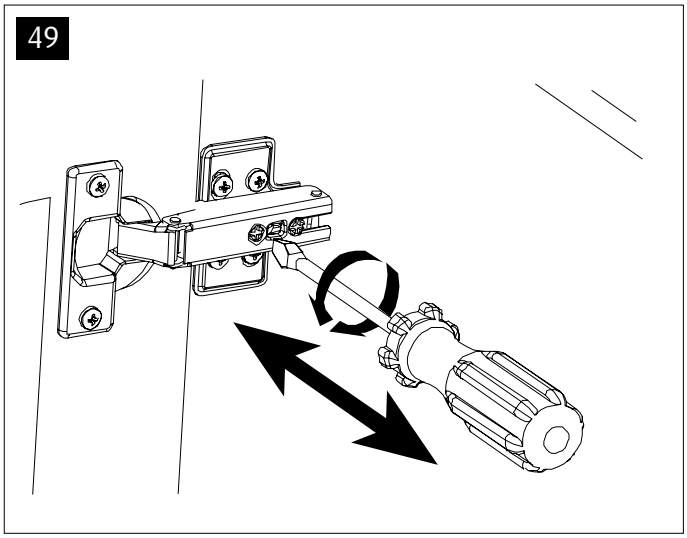

50

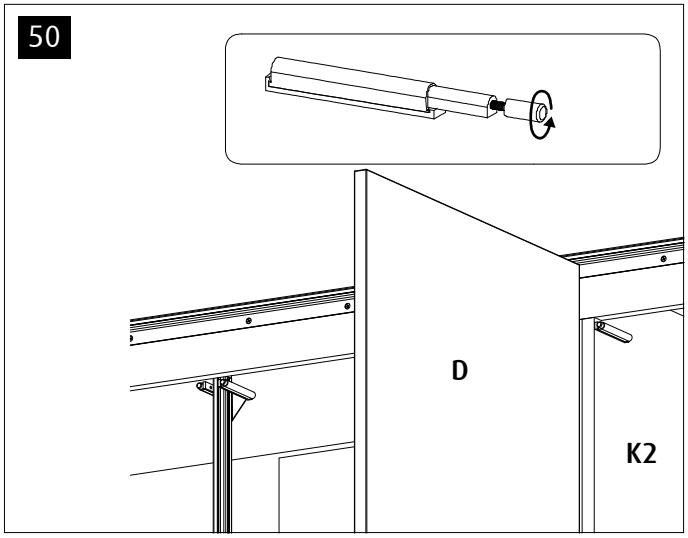

51

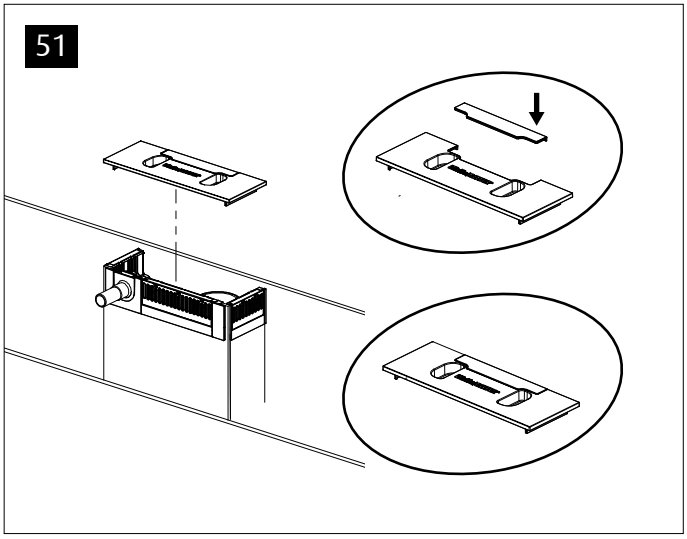

Maintenance

A

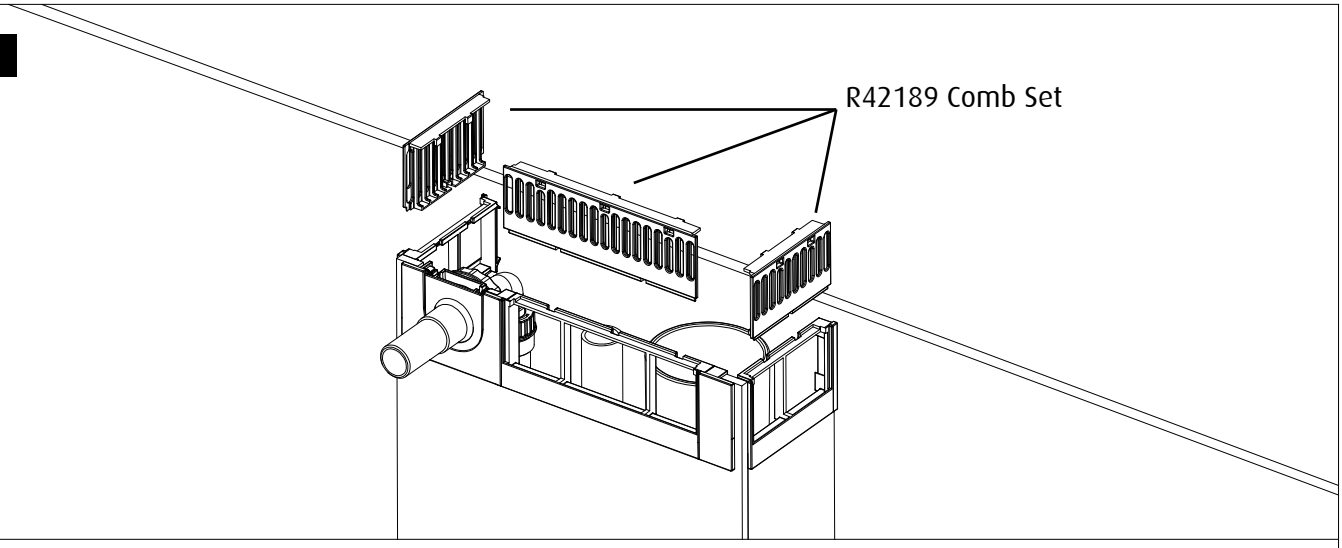

B

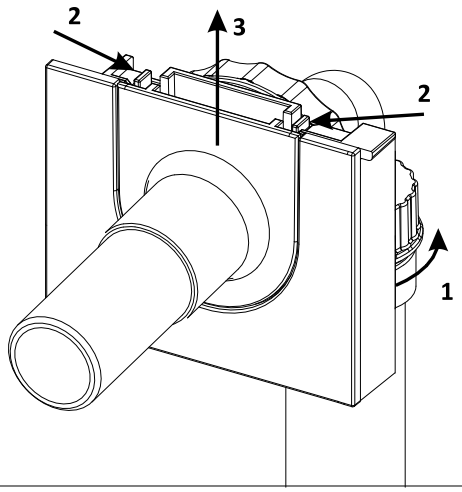

R42319 Outlet Assembly

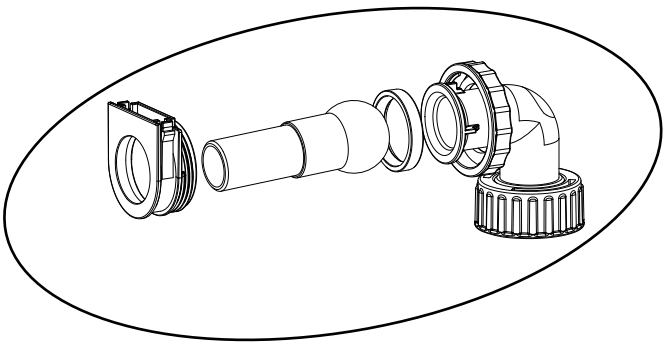

C 1

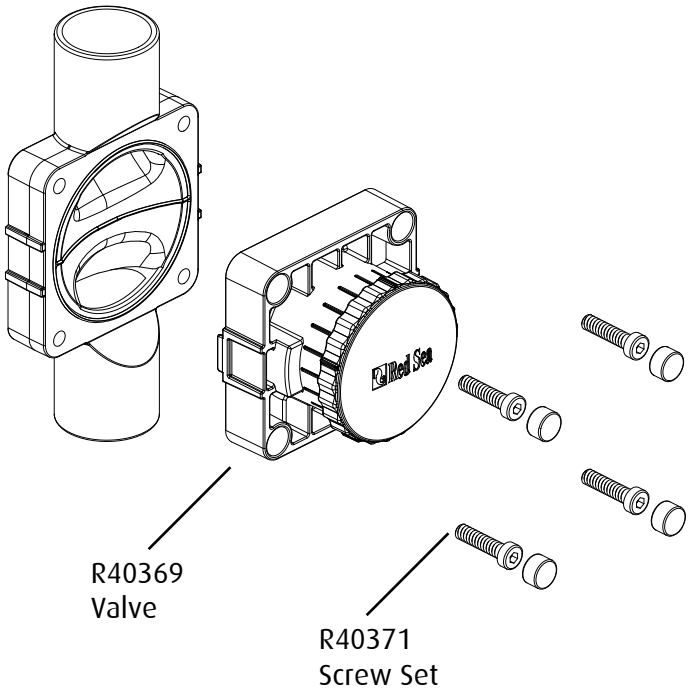

2

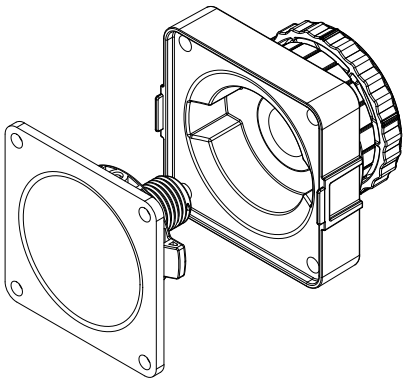

3

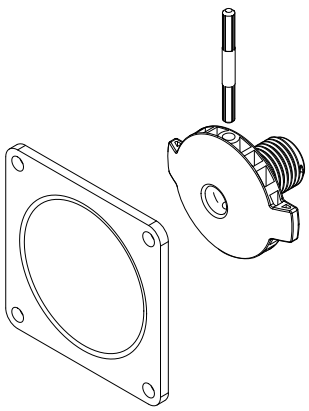

#7579-V2_Manual REEFER XXL 750 V2 Cabinet & Aquarium Manual_v20b

Europe

Red Sea Europe
655 Rue des Frères Lumière
27130 Verneuil d'Avre et d'Iton,
France
support.fr@redseafish.com

UK & Ireland

Red Sea Aquatics (UK) Ltd
PO Box 1237
Cheddar, BS279AG
uk.info@redseafish.com

North America

Red Sea U.S.A & Canada
4687 World Houston Parkway
#150
Houston, TX 77032, U.S.A
support.usa@redseafish.com

Germany & Austria

Red Sea Deutschland
Büro Deutschland
Prinzenallee 7 (Prinzenpark)
40549 Düsseldorf
support.de@redseafish.com

China

Red Sea Aquatics (GZ) Ltd.
Block A3, No.33 Hongmian Road,
Xinhua Industrial Park,
Huadu District, Guangzhou City,
China, Postal code 510800.
Tel: +86-020-6625 3828
info.china@redseafish.com

Red Sea
www.redseafish.com